1

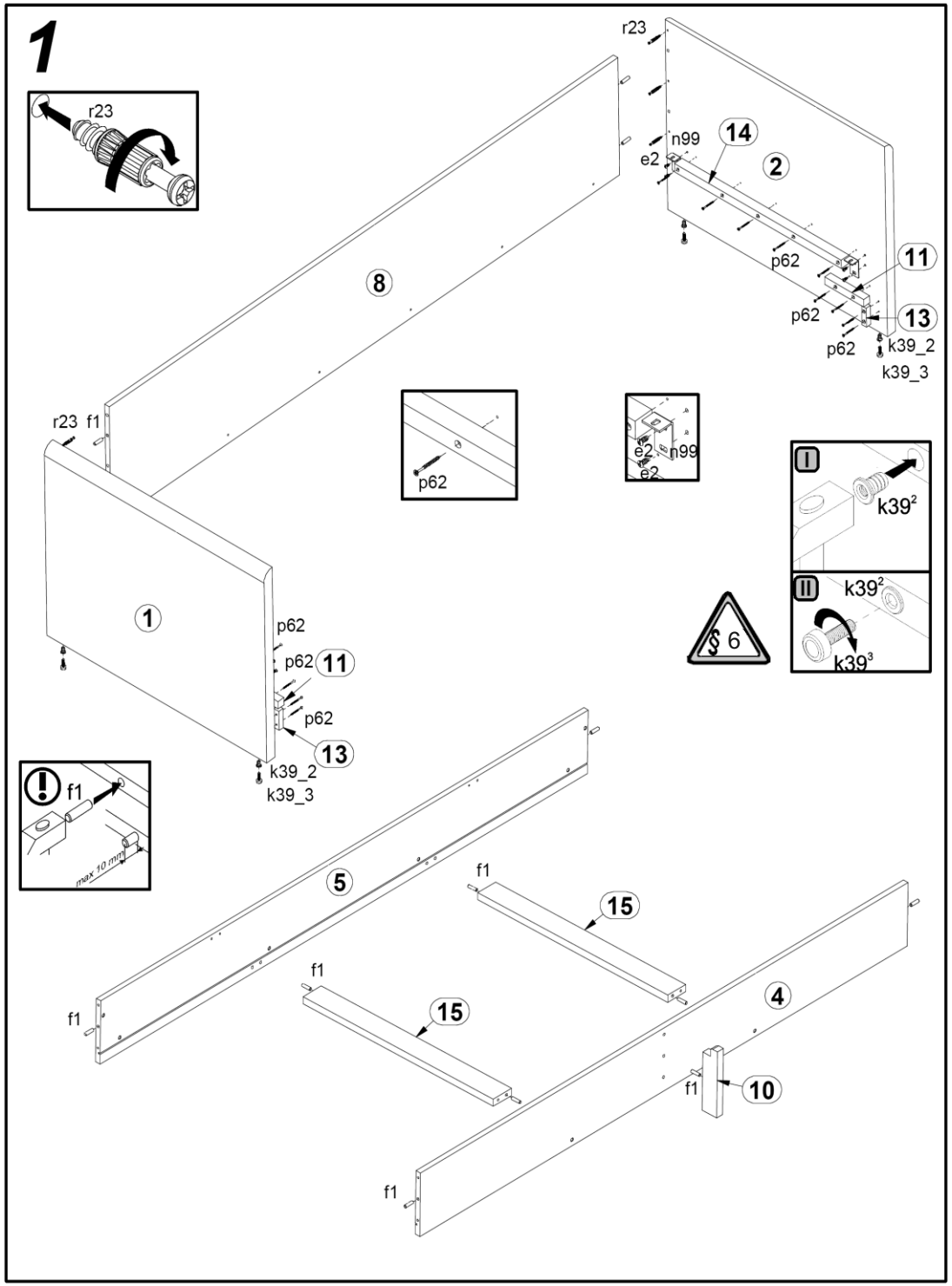

SEVILLA

łóżko 80_160

A	B	C	D
1	S48-022/A	802	600	1/4
2	S48-023/A	802	600	1/4
3	S48-024	1948	365	4/4
4	S48-408	1878	190	2/4
5	S48-409	1878	190	2/4
6	S48-410	767	190	2/4
7	S48-411	767	190	2/4
8	S48-412	1960	370	2/4
9	ZZ1-401	1950	1500	1/2
10	ZZ1-402	198	52	3/4
11	ZZ1-403	140	23	3/4
12	ZZ1-404	750	180	2/2
13	ZZ1-405	60	17	3/4
14	ZZ1-406	600	27	3/4
15	ZZ1-407	684	70	3/4
16	ZZ1-408	1896	712	3/4
17	ZZ1-903	1888	694	3/4

§ 1

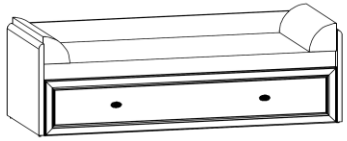

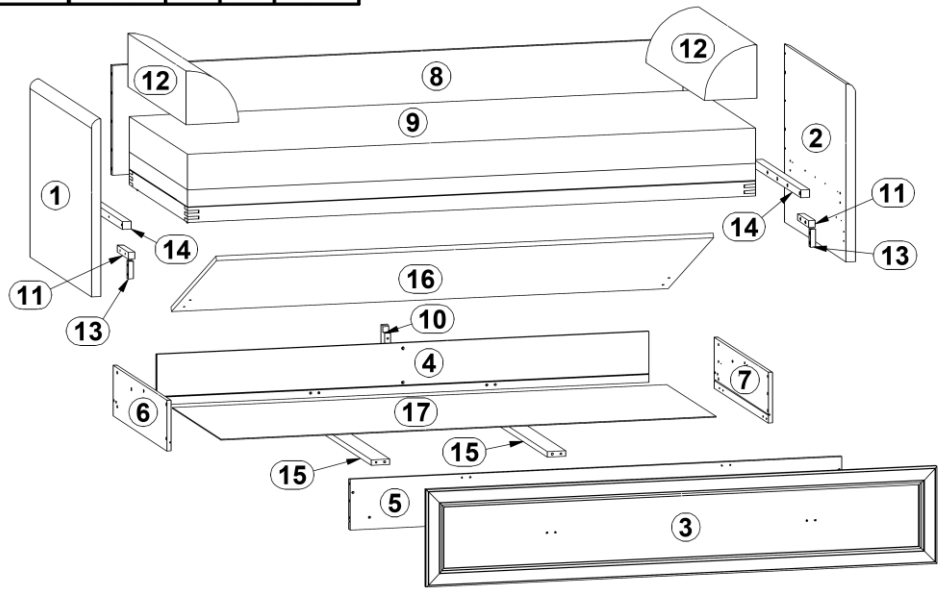

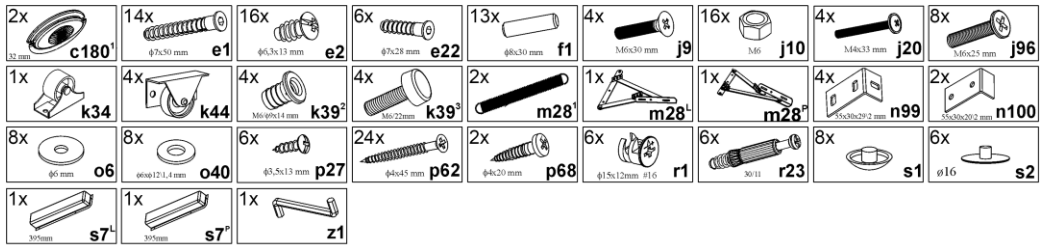

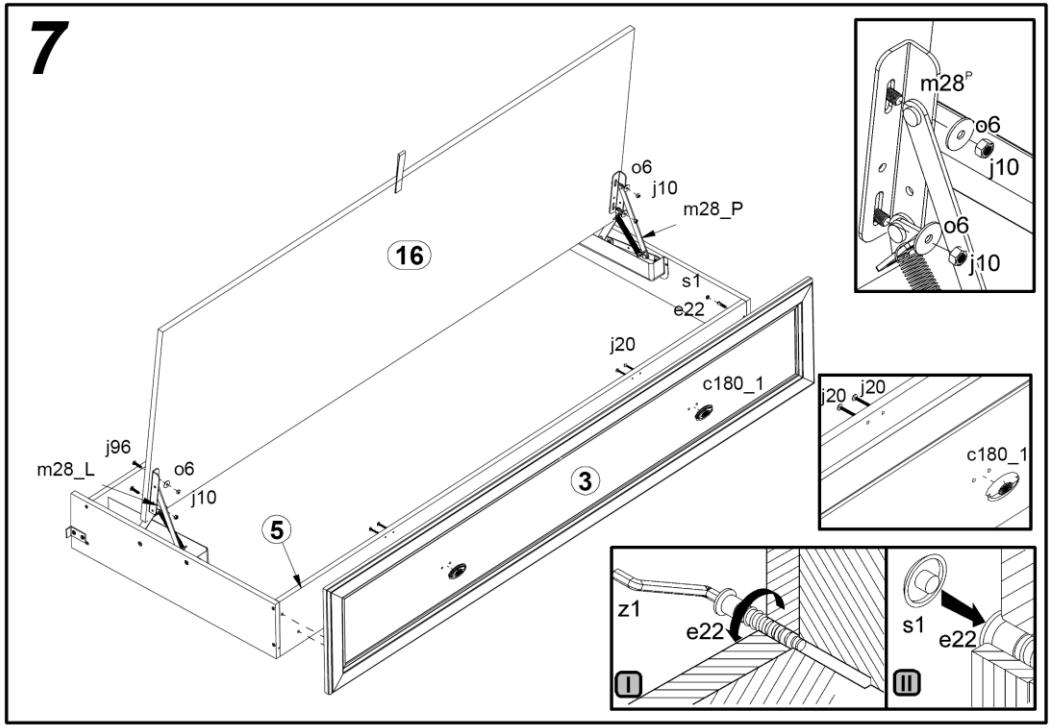
7
16
o6
j10
m28_P
s1
e22
j20
c180_1
3
5
m28_L
j96
o6
j10
m28P
o6
j10
o6
j10
j20
j20
c180_1
z1
e22
I
s1
e22
II

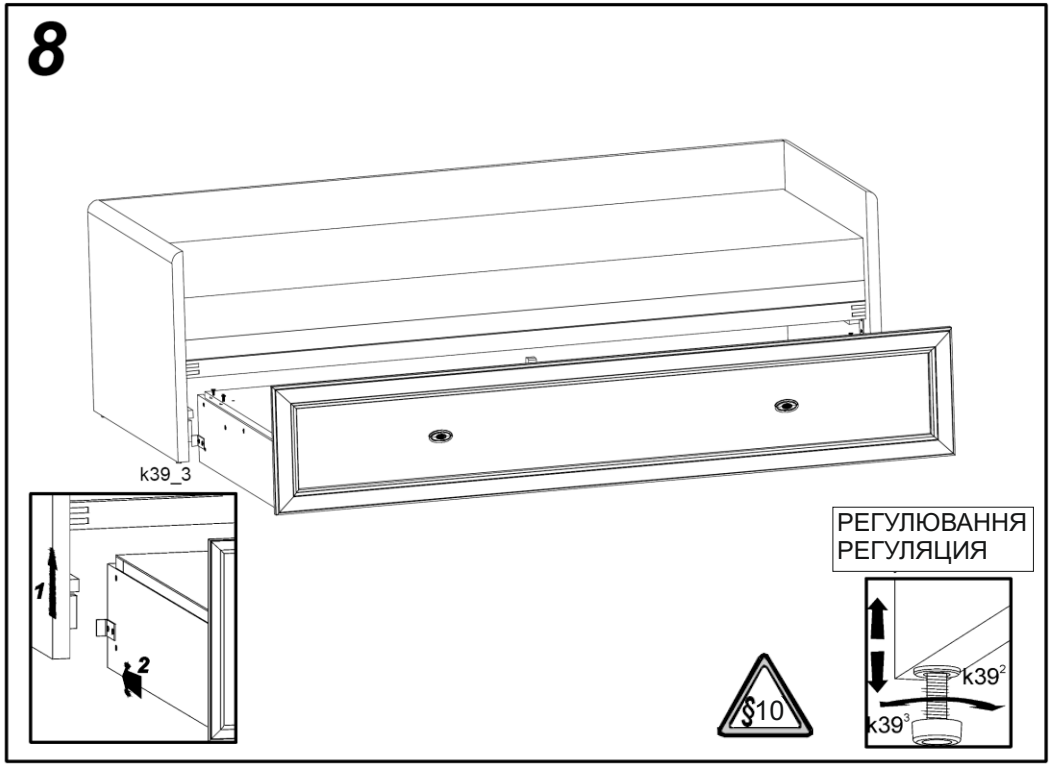
8
k39_3
1
2
РЕГУЛЮВАННЯ
РЕГУЛЯЦИЯ
§10
k39²
k39³

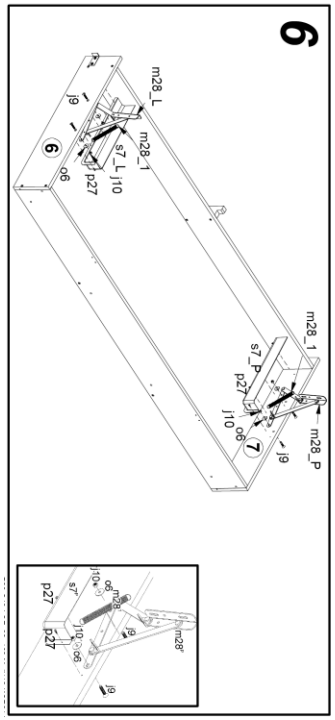
6
m28_L
m28_1
j9
s7_L
j10
p27
o6
6
m28_1
s7_P
p27
j10
o6
7
j9
m28_P
p27
s7
j10
o6
m28
j9
p27
j10
o6
m28
j9

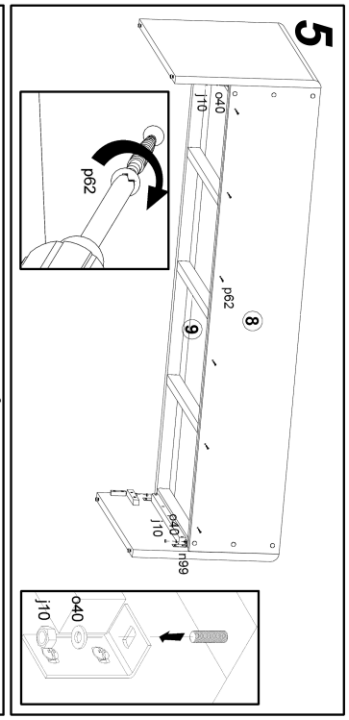
5
o40
j10
p62
p62
8
9
o40
j10
n99
j10
o40

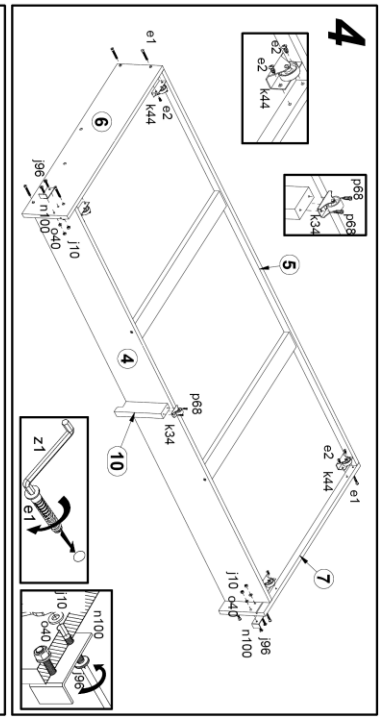
4
e1
e2
e2
k44
6
j96
n100
o40
j10
p68
p68
k34
5
4
p68
k34
10
e2
k44
e1
7
j10
o40
n100
j96
z1
e1
j10
o40
n100
j96

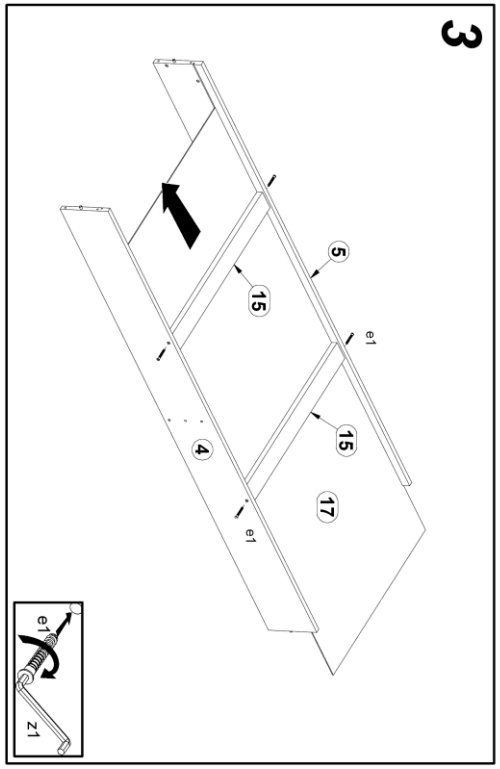
3
5
15
e1
15
4
17
e1
e1
z1

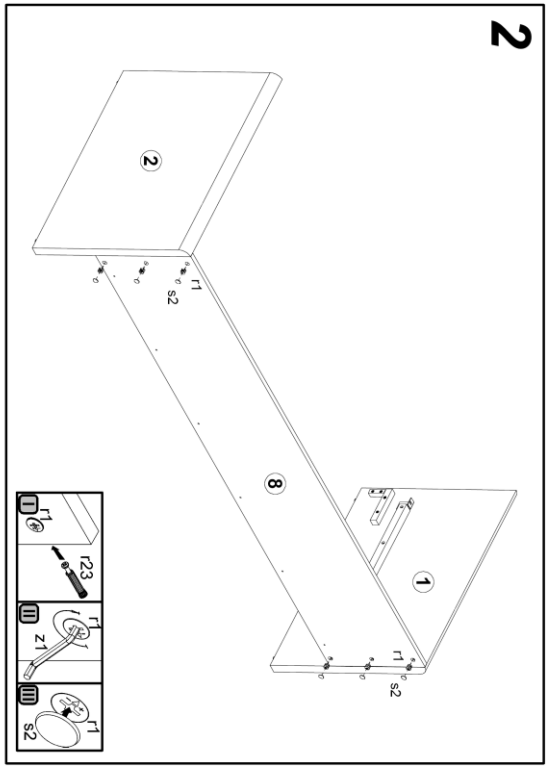
2
2
r1
s2
8
1
r1
s2
I
r1
r23
II
r1
z1
III
r1
s2